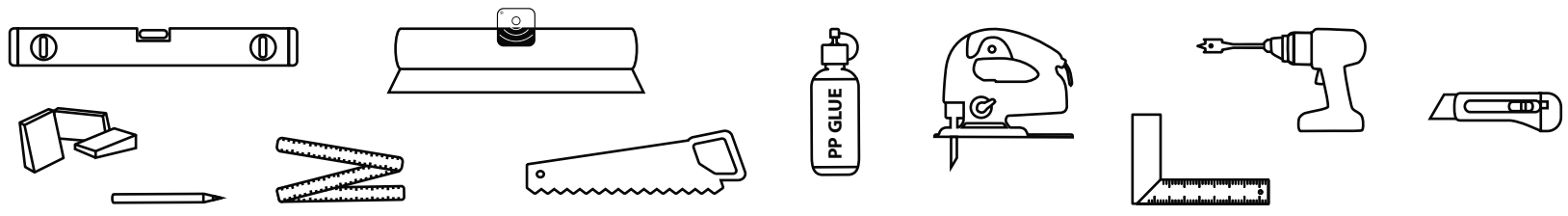
PP GLUE

Rev. 8.1 / 03.24

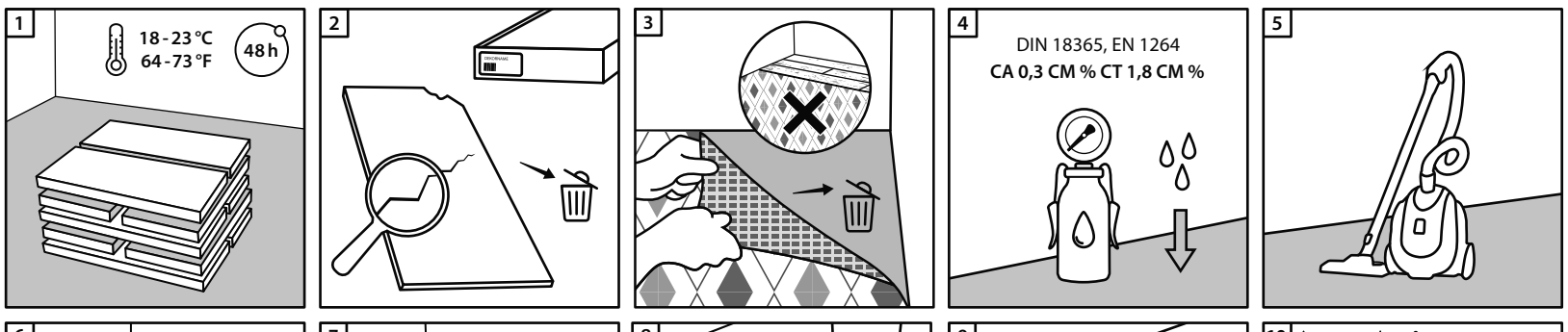
1
18 - 23 °C
64 - 73 °F
48 h
2
3
4
DIN 18365, EN 1264
CA 0,3 CM % CT 1,8 CM %
5

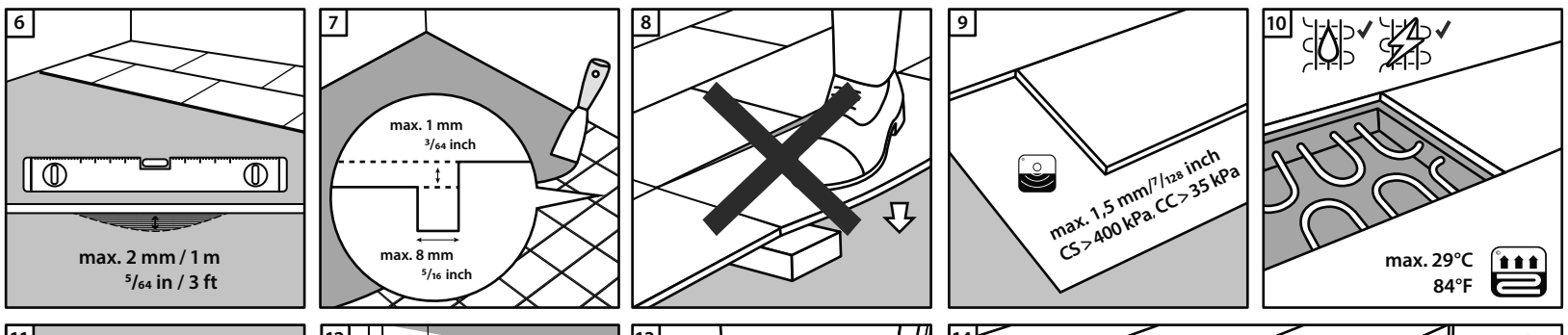
6
max. 2 mm / 1 m
5/64 in / 3 ft
7
max. 1 mm
3/64 inch
max. 8 mm
5/16 inch
8
9
max. 1,5 mm/7/128 inch
CS > 400 kPa, CC > 35 kPa
10
max. 29°C
84°F

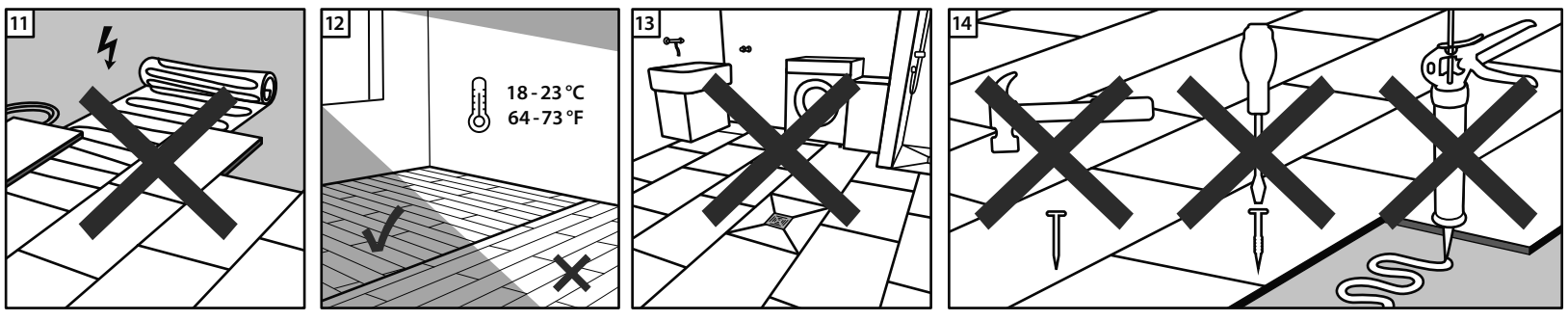
11
12
18 - 23 °C
64 - 73 °F
13
14

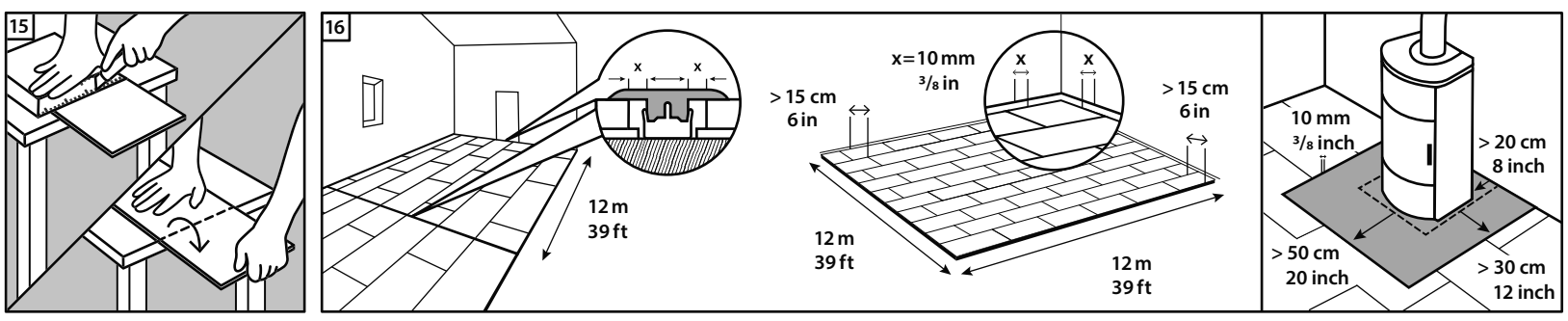
15
16
x
x
12 m
39 ft
x=10 mm
3/8 in
> 15 cm
6 in
12 m
39 ft
12 m
39 ft
> 15 cm
6 in
10 mm
3/8 inch
> 20 cm
8 inch
> 50 cm
20 inch
> 30 cm
12 inch

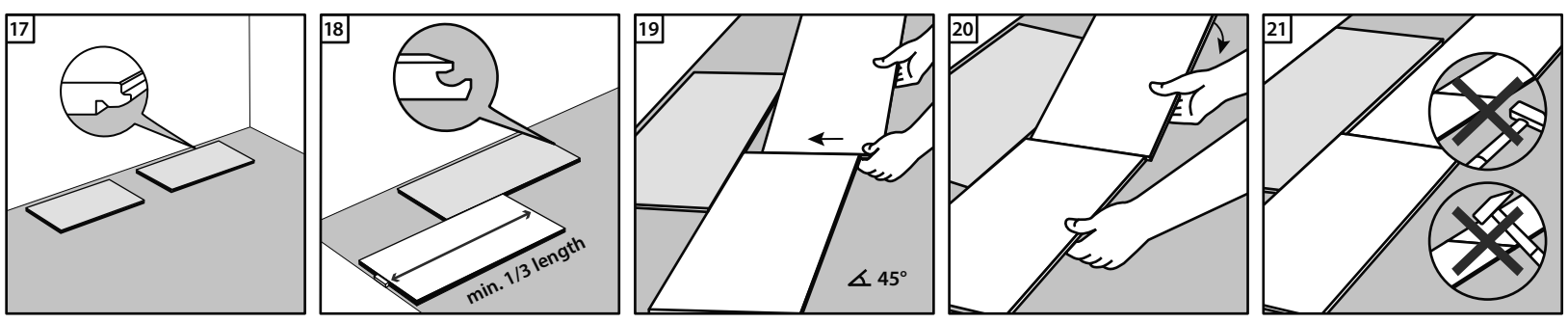
17
18
min. 1/3 length
19
45°
20
21

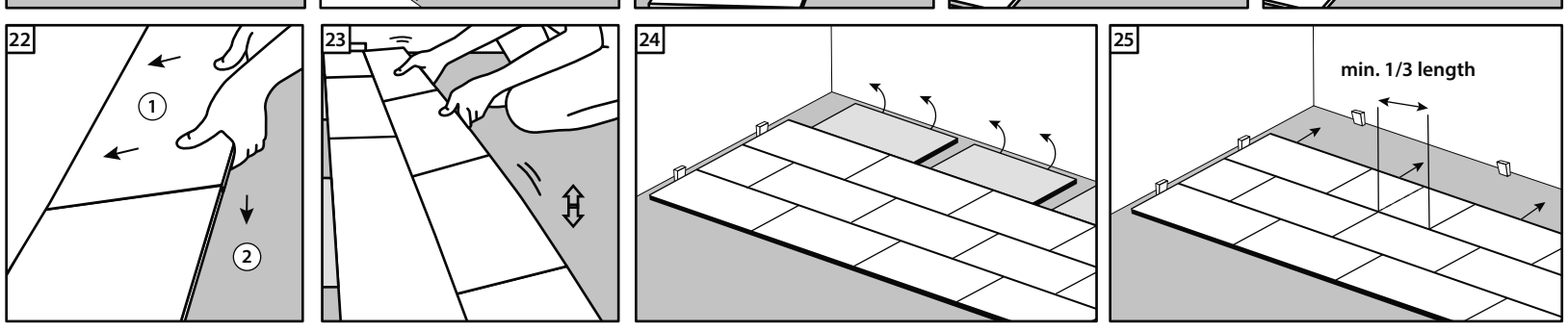
22
1
2
23
24
25
min. 1/3 length

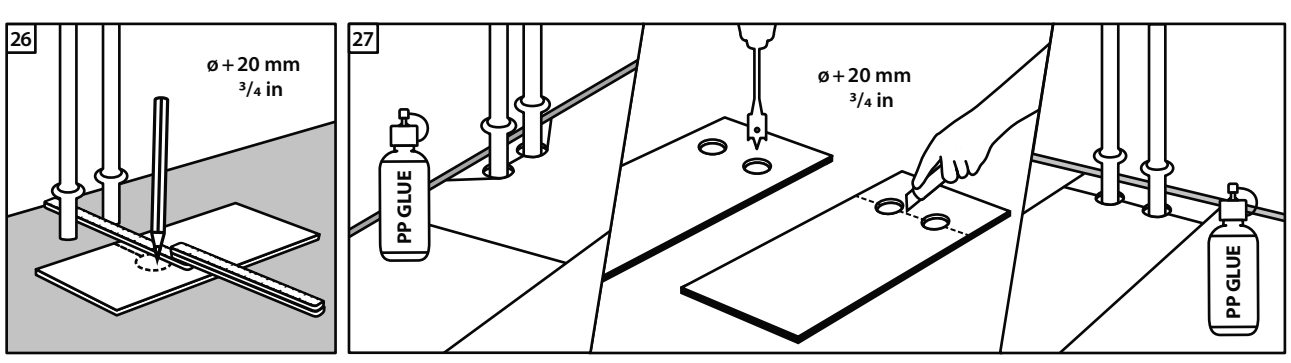
26
ø + 20 mm
3/4 in
27
ø + 20 mm
3/4 in
PP GLUE
PP GLUE

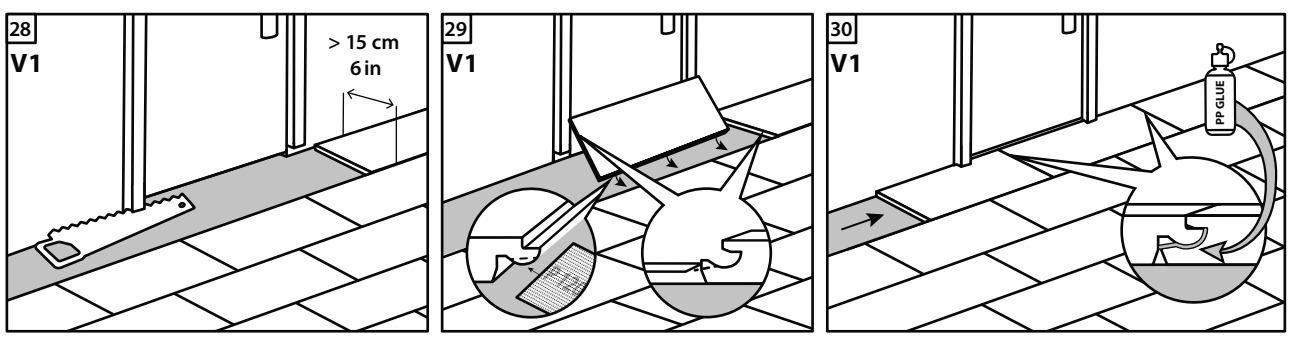
28
V1
> 15 cm
6 in
29
V1
30
V1
PP GLUE

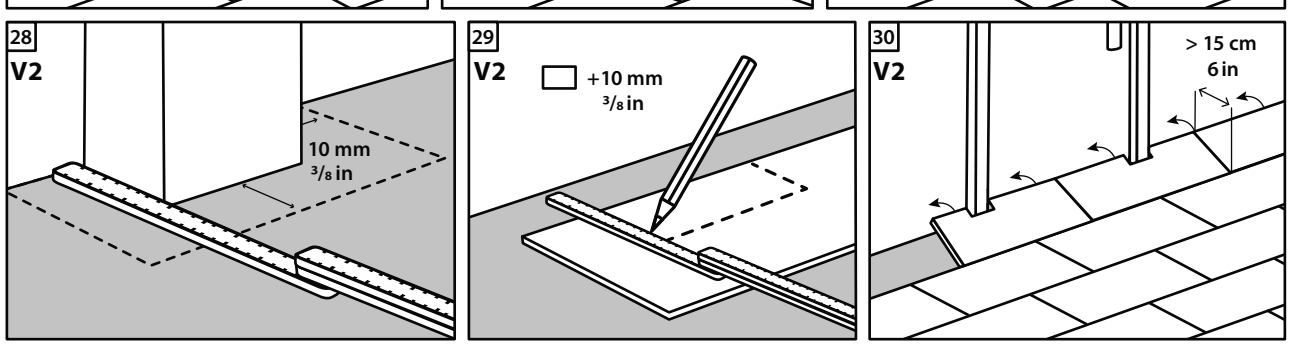
28
V2
10 mm
3/8 in
29
V2
+10 mm
3/8 in
30
V2
> 15 cm
6 in

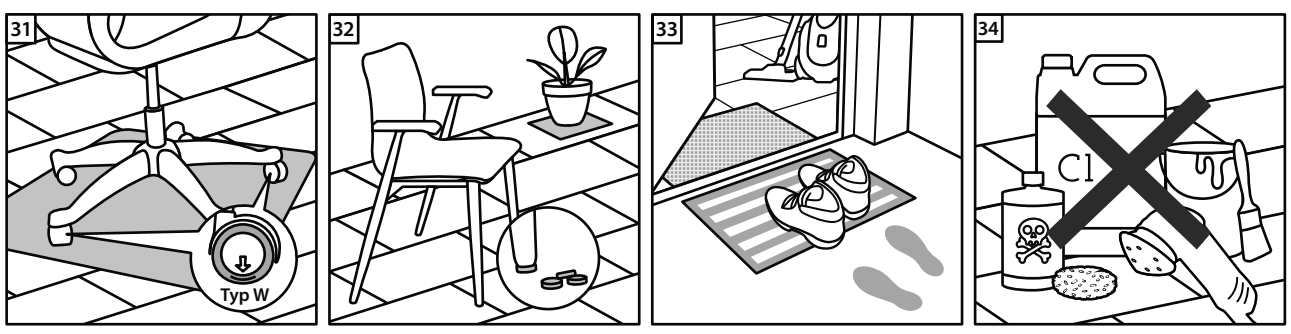
31
Typ W
32
33
34
Cl

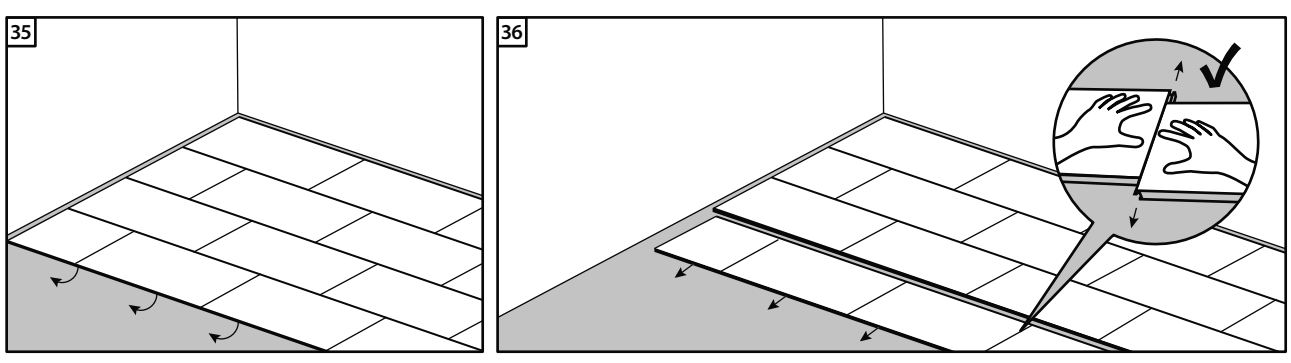
35
36