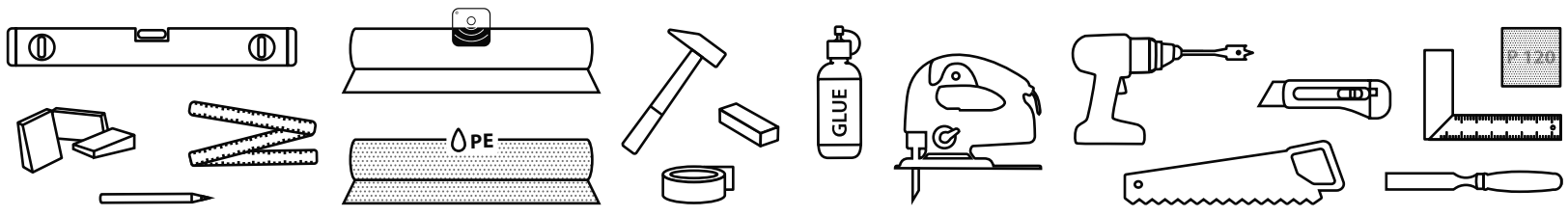
PE
GLUE
F 120

Rev. 2.2 / 11.23

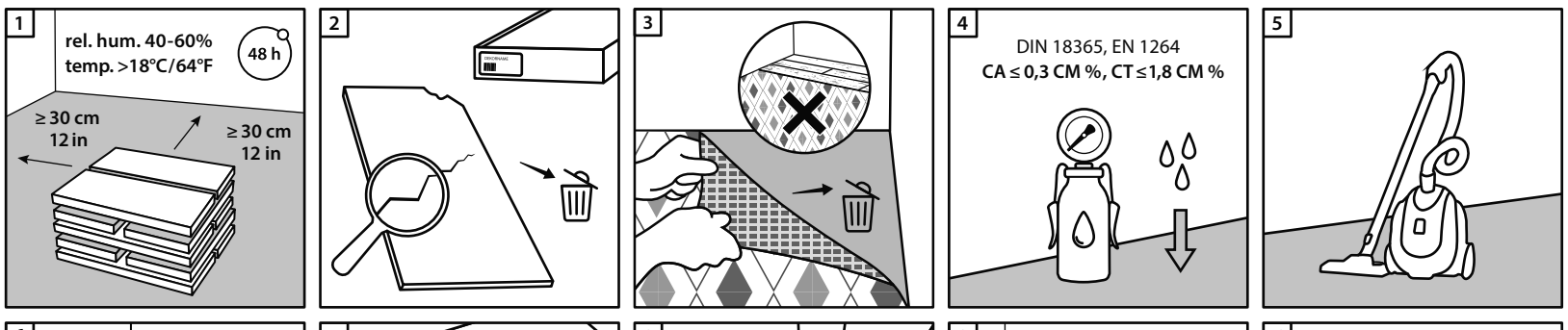
1
rel. hum. 40-60%
temp. >18°C/64°F
48 h
≥ 30 cm
12 in
≥ 30 cm
12 in
2
3
4
DIN 18365, EN 1264
CA ≤ 0,3 CM %, CT ≤ 1,8 CM %
5

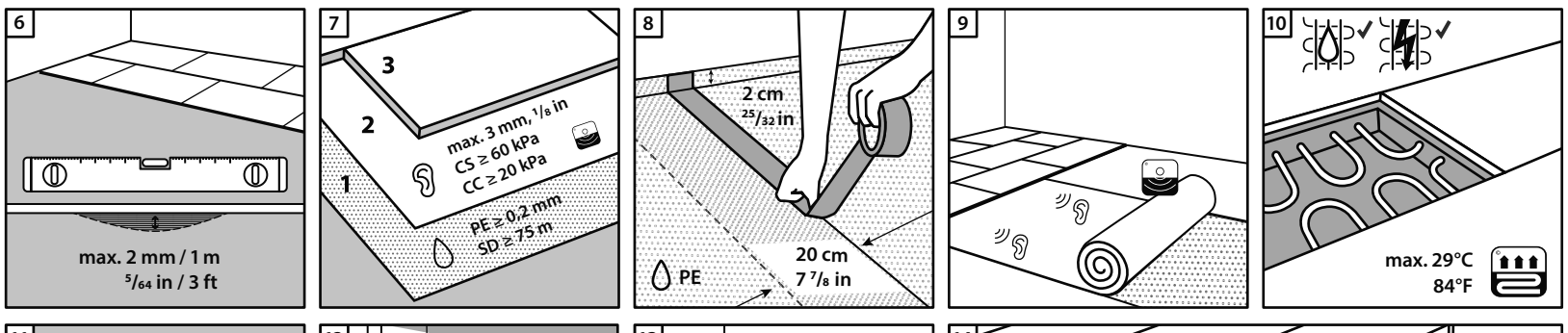
6
max. 2 mm / 1 m
5/64 in / 3 ft
7
3
2
1
max. 3 mm, 1/8 in
CS ≥ 60 kPa
CC ≥ 20 kPa
PE ≥ 0,2 mm
SD ≥ 75 m
8
2 cm
25/32 in
PE
20 cm
7 7/8 in
9
10
max. 29°C
84°F

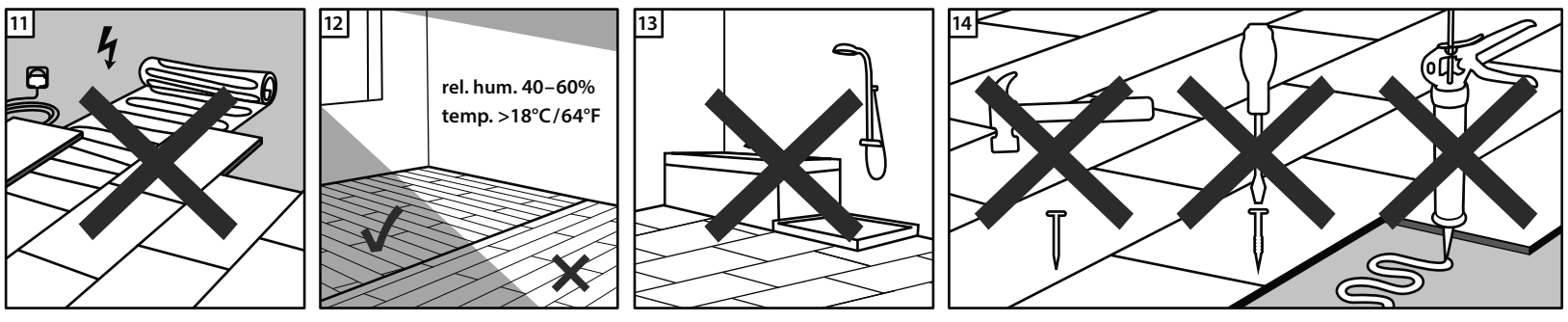
11
12
rel. hum. 40–60%
temp. >18°C/64°F
13
14

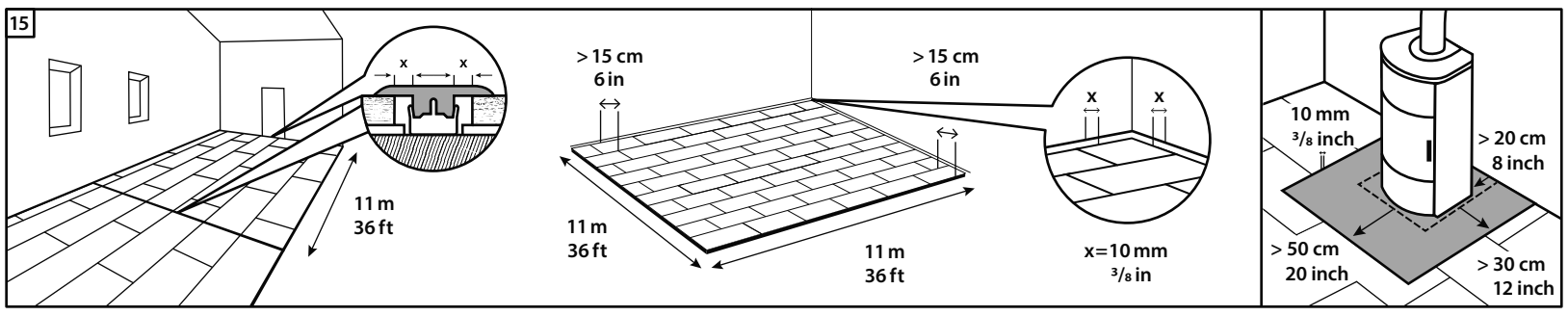
15
x
x
11 m
36 ft
> 15 cm
6 in
11 m
36 ft
> 15 cm
6 in
11 m
36 ft
x
x
x=10 mm
3/8 in
10 mm
3/8 inch
> 20 cm
8 inch
> 50 cm
20 inch
> 30 cm
12 inch

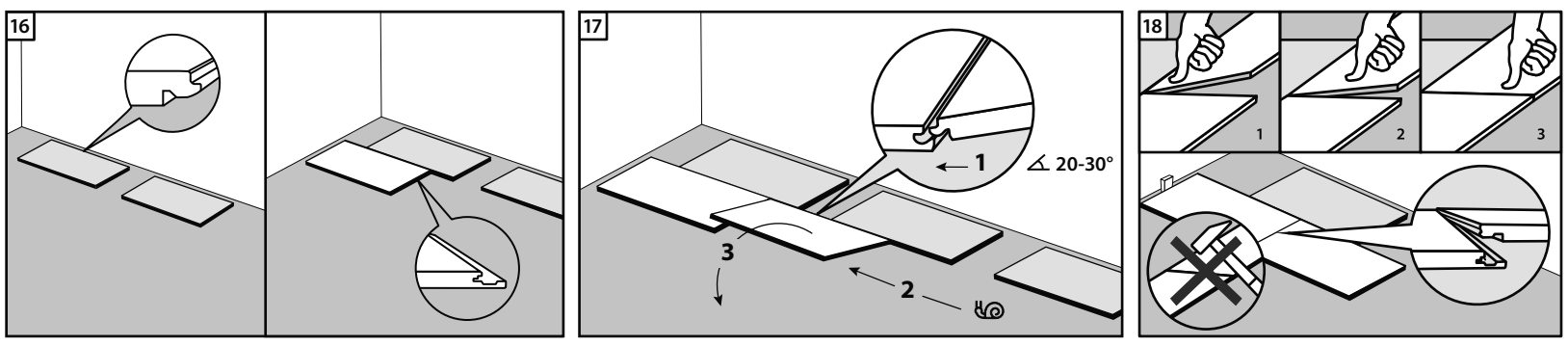
16
17
1
20-30°
3
2
18
1
2
3

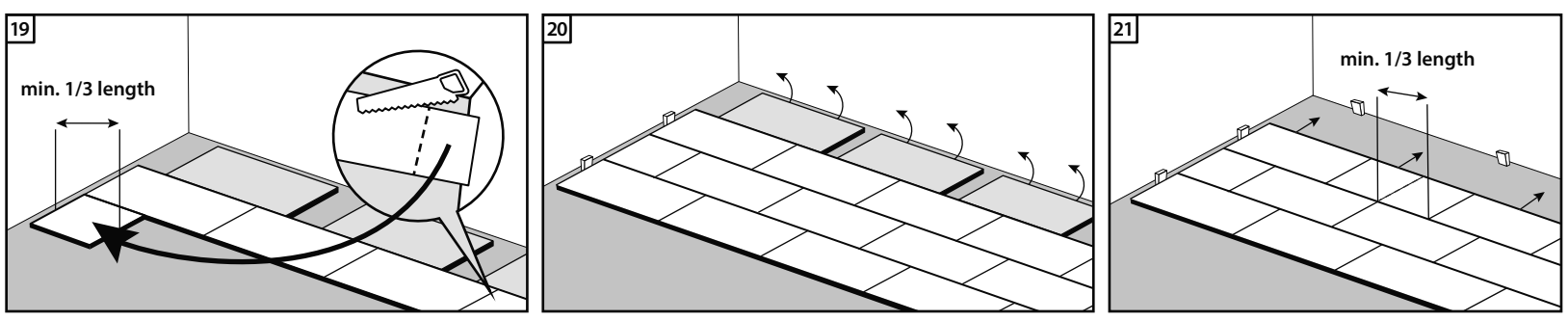
19
min. 1/3 length
20
21
min. 1/3 length

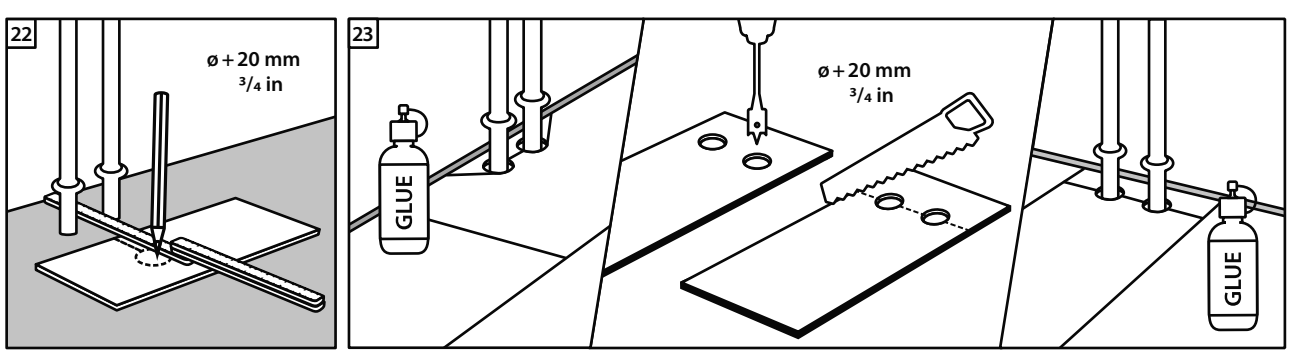
22
ø + 20 mm
3/4 in
23
GLUE
ø + 20 mm
3/4 in
GLUE

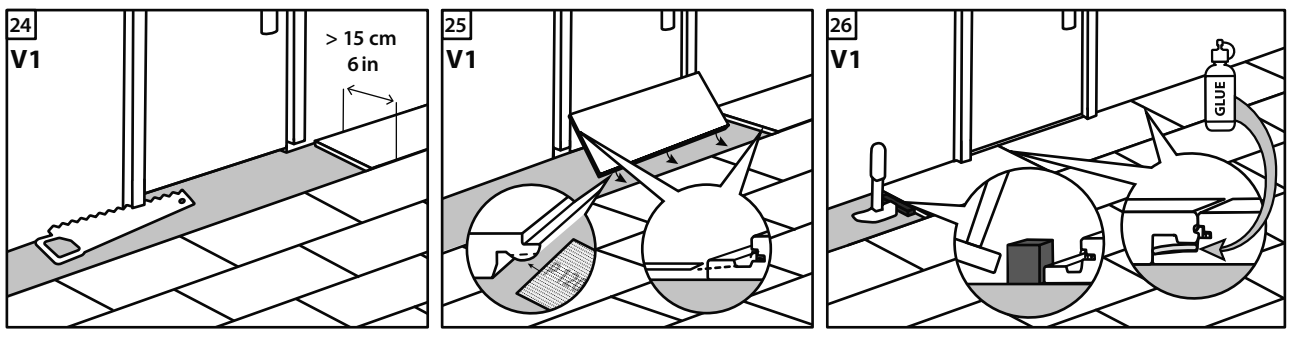
24
V1
> 15 cm
6 in
25
V1
26
V1
GLUE

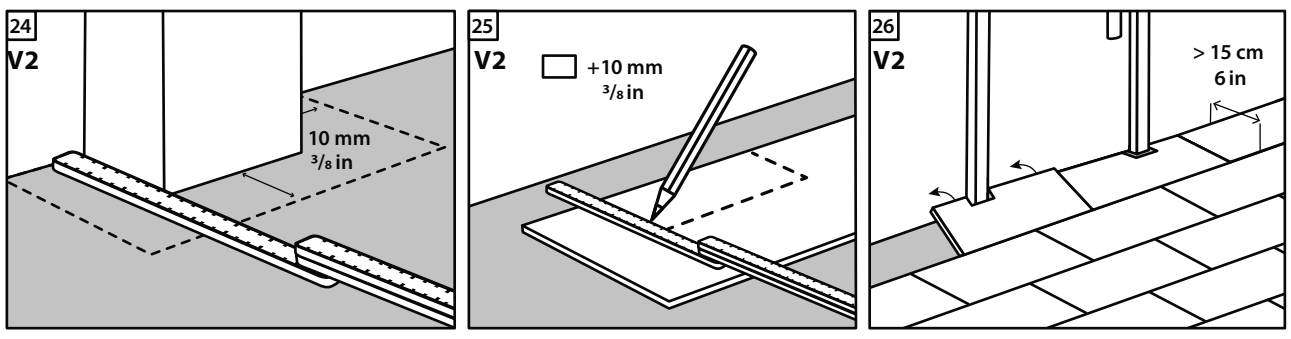
24
V2
10 mm
3/8 in
25
V2
+10 mm
3/8 in
26
V2
> 15 cm
6 in

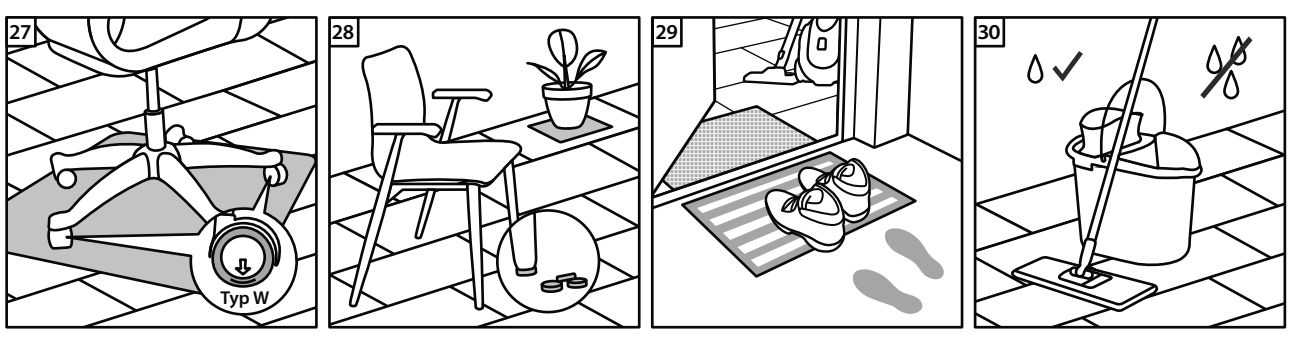
27
Typ W
28
29
30

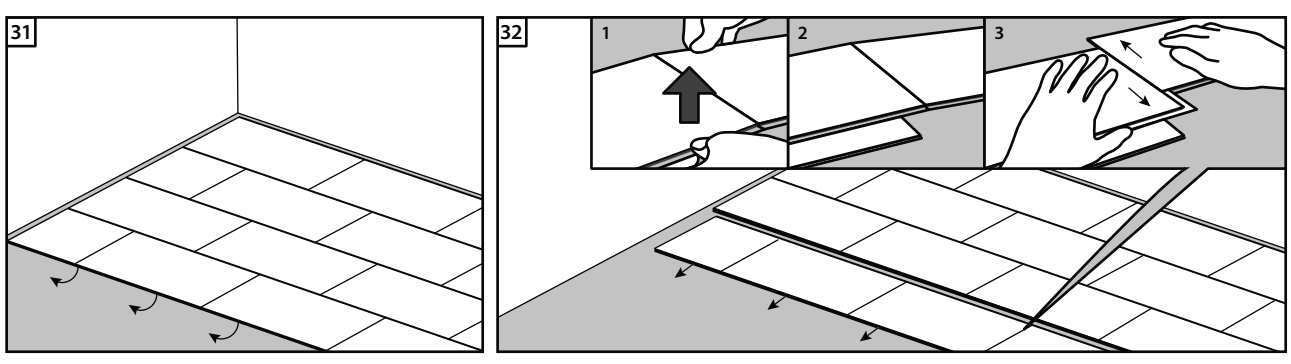
31
32
1
2
3